SUPERJAN
CIRCULATOR WATER HEATER
INSTALLATION, COMMISSIONING & SERVICING INSTRUCTIONS
G.C. No 53 416 17

Publication No. ZZ 566/7
May 2000

This appliance has been tested and certified by B G Technology for use with natural gas only.

IMPORTANT: These instructions are to be read in conjunction with the relevant air heater Installation, Commissioning and Servicing Instructions.

WARNING: THIS APPLIANCE MUST BE EARTHED

1. GENERAL DESCRIPTION

1.1 SUPERJAN is an open flued, electrically switched, gas fired circulator which can generate up to 114 litres per hour (25.6 gal/h) of hot water when installed into Johnson & Starley JT19-25 mks 1 & 2, and J25-32 mks 2 & 3 series air heater. It is suitable for use in a fully pumped system comprising of radiators and/or an INDIRECT or SELF PRIMING cylinder. SUPERJAN may also be used in a sealed system application, when used in conjunction with a CK 2 Pump Overrun Kit, since it is fitted with an overtemperature interrupt device. If the intention is to connect a SUPERJAN with a DIRECT cylinder, the local Water Authority should first be consulted. Connection of SUPERJAN to a DIRECT cylinder is only suitable for providing hot water but not radiator heating. A phosphor bronze pump must be fitted to the direct system and suitable precautions must be taken to prevent scale formation.

1.2 The gas supply to the main burner is controlled by a multifunctional gas control valve. In addition, an electrically operated solenoid valve is fitted to permit the main burner to be remotely switched on and off. The main burner operates in conjunction with a permanent pilot burner and a thermoelectric sensing device. Pilot ignition is by means of a Piezo unit.

2. TECHNICAL DATA

2.1 **NATURAL GAS.**

Injector: Amal type 187/001/*006.

	Minimum Rate	Medium Rate	Maximum Rate
Setting pressure:	7.6 mbar (3.0 in wg).	11.5 mbar (4.6 in wg).	16.0 mbar (6.4 in wg).
Gas rate:	0.504 m^3/h (17.80 ft^3/h).	0.622 m^3/h (21.95 ft^3/h).	0.735 m^3/h (25.96 ft^3/h).
Input:	5.41 kW (18,500 Btu/h).	6.67 kW (22,800 Btu/h).	7.89 kW (26,900 Btu/h).
Output:	4.00 kW (13.600 Btu/h).	5.00 kW (17,000 Btu/h).	6.00 kW (20,500 Btu/h).
Water Flow Rate 11°C (20°F) temp. rise.	5.2 litres/min.	6.5 litres/min.	7.8 litres/min.
Pressure drop	9.2 mbar (3.7 in wg).	13.7 mbar (5.5 in wg).	19.2 mbar (7.7 in wg).

Table 1.
SUPERJAN configuration

2.2 **WATER.**

Maximum output: 114 litres/h (25.6 gal/h) with 44.5°C (80°F) rise.
Water temperature: Adjustable between 50°C (122°F) and 77°C (170°F).
Maximum working head: 20m (65ft).
Minimum circulation head: 1 m (3.3 ft).
Water connections: Rp $^3/_4$ ($^3/_4$" BSP internal parallel).

2.3 **ELECTRICAL SUPPLY:** 230V, 50Hz, fused at 5 Amps (a common electrical supply supplies both the air heater and circulator.

3.1 **RELATED DOCUMENTS (refer to current issues).**
This appliance MUST BE installed in accordance with the relevant requirements of the Gas Safety (Installation and Use) Regulations, the Building Regulations, the I.E.E. wiring regulations for electrical installations, the Model Water bye-laws and the Bye-laws of the local Water undertaking. It should also be in accordance with any relevant requirements of the local Gas Region and Local Authority, and the relevant recommendations of the following British Standard Codes of Practice:

BS 6798: Specification for installation of gas fired hot water boilers of rated input not exceeding 60kW.
BS 5449 Pt. 1: Forced circulation hot water systems.
BS 5546: Installation of gas hot water supplies for domestic purposes (2nd family gasses).
BS 5440 Pt. 1: Flues.
BS 5440 Pt. 2: Air supply.
BS 6891: Installation of low pressure gas pipe work up to 28mm (R1) in domestic premises.
BS 6700: Design, Installation, testing and maintenance of services supplying water for domestic use within buildings and their curtilages.
BS 7593: Code of practice for treatment of water in domestic hot water central heating systems.

3.2 **GAS SUPPLY.** Installation of pipework is to be in accordance with BS 6891. Pipework from the gas meter is to be of adequate size, and pipes of a smaller diameter than the appliance are not to be used. The complete installation must be tested for gas soundness, and purged as detailed in BS 6891.

3.3 **WATER CIRCULATION SYSTEM.** Detailed recommendations for the water circulation system are given in BS 6798, BS 5449 (for small bore and microbore central heating systems), and BS 5446.

3.3.1 Pipework should be installed with a rise towards the vent point.

3.3.2 Drain cocks must be located in accessible positions, which permit the draining of the whole system, including the appliance and hot water storage vessel. A drain cock should be fitted at the lowest point of the water heating circuit and, in the case of an indirect system, another must be fitted at the lowest point of the cold feed. Drain cocks should be at least $^1/_2$ in nominal size, and be in accordance with BS 2879.

3.3.3 The pump should be sized to accommodate the water flow and pressure drop necessary to achieve a temperature differential across the appliance of 11°C (20°F), (refer to Table 1).

3.3.4 SUPERJAN is a low cost appliance designed for use with a diverter valve which permits the selection of the proportion of energy allocated to the central heating and the hot water systems. The valve must contain a bleed hole which allows a minimum of 10% of the flow to be diverted to the hot water storage vessel, OR, a 15 mm bypass must be fitted between the pump and the radiators when the appliance is used for central heating only. If more sophisticated central heating controls are required, refer to the control equipment manufacturers' Installation and servicing instructions, or consult Johnson & Starley Ltd.

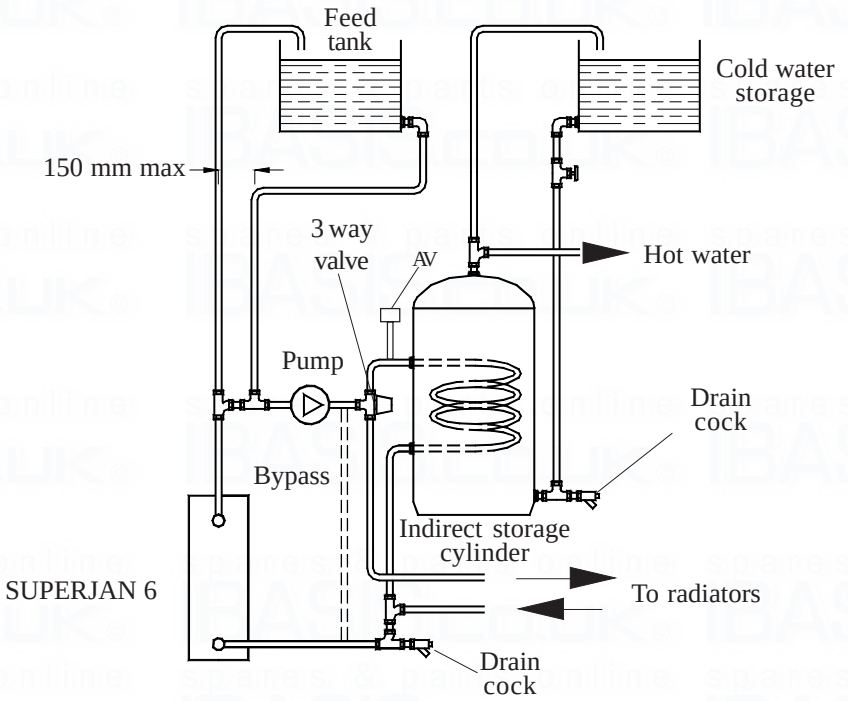

Fig. 1a.
Typical SUPERJAN Indirect cylinder application.

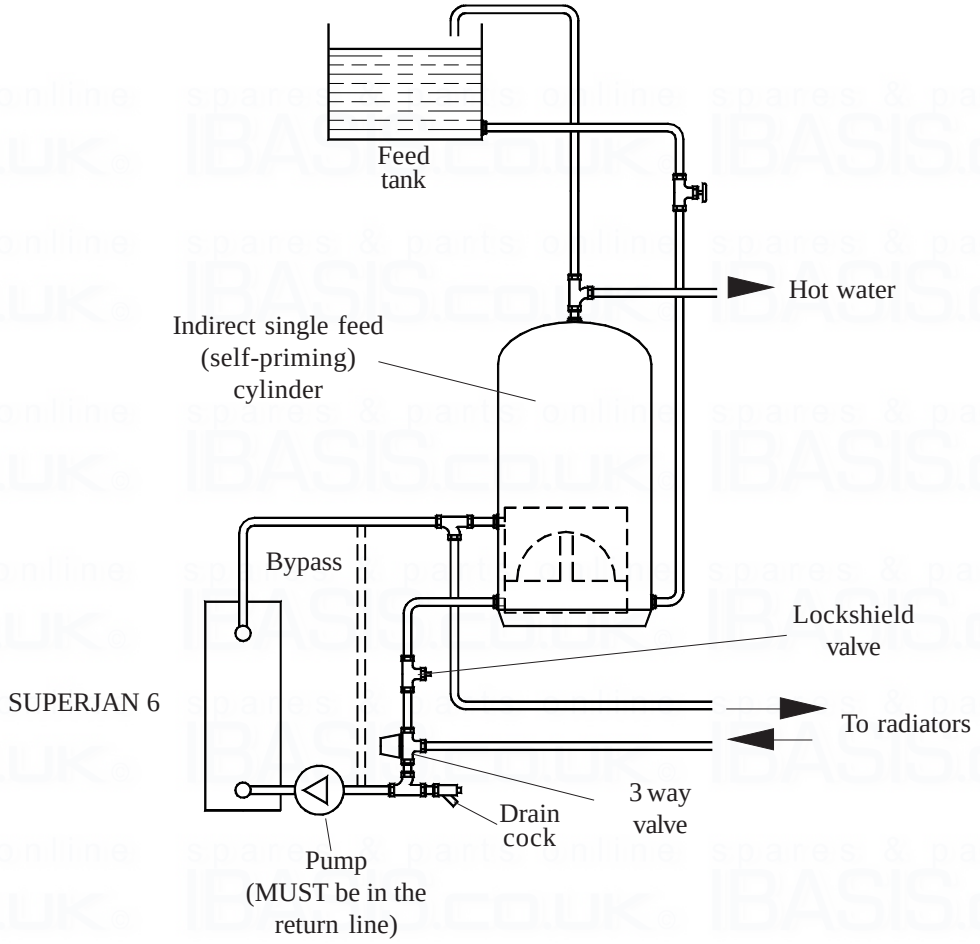

Fig. 1b
Typical SUPERJAN Indirect feed (self priming) cylinder application.

3.4 **ELECTRICAL SUPPLY:** Wiring external to the appliance must be in accordance with the Institute of Electrical Engineers (I.E.E.) regulations 488 (current edition), and any other local regulations which may apply.

4. INSTALLATION

4.1 VENTILATION AND COMBUSTION AIR.

4.1.1 The requirements given in the Installation, Commissioning and Servicing Instructions for the Air Heater relating to Ventilation and Combustion air **MUST** be replaced with the following information:

a. The room or internal space in which the air heater is installed requires a permanent air vent. The air vent should be either direct to outside air, or to an adjacent room or internal space (other than a bedroom, bathroom or toilet) that itself has an equivalent vent to outside. The minimum effective area of the permanent air vent is:

JT19-25 series air heater with SUPERJAN:	80 cm^2 (13 in^2).
J25-32 series air heater with SUPERJAN:	92 cm^2 (15 in^2).

b. With no other fuel burning appliance in the same room, the minimum effective area of the permanent air vent may be reduced to 48 cm^2 (JT19-25) and 61 cm^2 (J25-32).

4.1.2 When installed in a compartment, two permanent ventilation openings into the compartment are required, one at high level and one at low level, both communicating either directly with outside air or with a ventilated room or space. The minimum effective areas specified below are related to the combined rated heat input when a SUPERJAN circulator is fitted and in some instances are greater than the minimum values calculated from BS 5440 Pt. 2, Table 2.

		JT19-25 series air heater + circulator (maximum 17.6 kW)	J25-32 series air heater + circulator (maximum 20.4 kW)
VENTILATED FROM INSIDE BUILDING*	Low level grille	452cm² (70in²)	555cm² (86in²)
	High level grille	452cm² (70in²)	452cm² (70in²)
VENTILATED FROM OUTSIDE BUILDING	Low level grille	452cm² (70in²)	555cm² (86in²)
	High level grille	452cm² (70in²)	226cm² (35in²)

Table 2
Minimum effective areas

* These shall not communicate with a bathroom, bedroom or bedsitting room.

IMPORTANT: (J25-32 installations only) The height of the low level grille MUST BE at least 1.25 times it width.

4.2 WATER CONNECTIONS.

4.2.1 Connect flow and return pipes as required, in accordance with the guidelines detailed in Sect 3.3. To facilitate subsequent dismantling of the heat exchanger, use union fittings at the point of connection to the appliance. Ensure that pipe work does not restrict access to the thermostat phial, the circulator flue hood inspection panel, or the air heater heat exchanger access plate.

4.2.2 **Side Exit:** Use the knockouts provided in the heater cabinet sides for external pipe routing.

4.2.3 **Top Exit (J25-32 only):**

a. Remove the plastic plugs in the top panel and fan compartment floor of the air heater, and feed the flow and return pipes through the holes from below. Ensure the return pipe is to the rear.

b. Firmly tighten the connections at the circulator before completing the connections at the top of the flow and return pipes.
Note: Fittings on the circulator body must be well supported when making these connections.

c. Using good quality ducting tape, seal where the pipes pass through the fan compartment floor and the top panel of the air heater.

4.2.4 Thoroughly flush out the system prior to installation of the pump, ensuring that all valves are OPEN.

4.3 ELECTRICAL SUPPLY.

4.3.1 Wiring external to the appliance must be installed in accordance with the Institution of Electrical Engineers (I.E.E.) Regulations for electrical installations and any other local regulations which apply. PVC sheathed, heat resisting to 70°C, 3-core Brown-Blue-Green/Yellow, 6A, 0.75mm² cable should be used. The means of isolating the appliance must be by a double pole switch with a contact separation of at least 3 mm in both poles.

4.3.2 The terminal block for external connection to the air heater is situated on the electrical panel inside the fan chamber door.

4.3.3 **External Connections:** Referring to the appropriate air heater circuit diagram, route the external electrical from the air heater terminal block terminals **'11'** and **'12'**, and the electrical panel earth stud, to the external water pump via the cable clamp and grommet in the top panel of the air heater.

Note: The water pump MUST BE EARTHED to the air heater electrical panel earth stud.

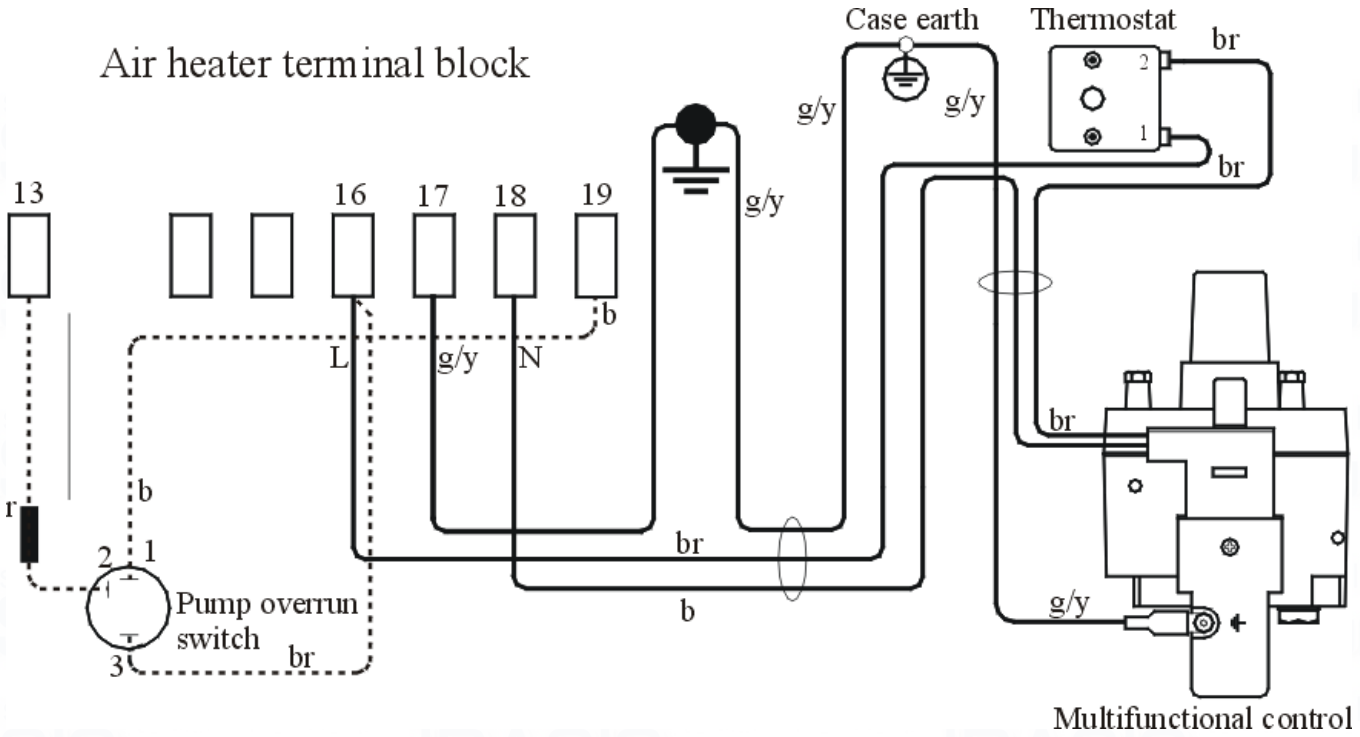

Fig. 2
SUPERJAN wiring diagram

5. COMMISSIONING

5.1 With the pump fitted, fill the water circulation system, clear any air locks and check for water soundness.

5.2 **SEALED SYSTEMS:**

Note: Connections for filling a sealed system must include a stop valve and a double check valve assembly to prevent system water from back feeding into the main supply.

5.2.1 **Method of filling:** The method of filling a sealed system should be either of the following:

a. A temporary hose connected to mains water, where a stop valve should be fitted to the service main outlet and a double check valve assembly and stop valve to the system side of the hose, **or**

b. A cistern used for no other purpose, connected to the mains water. The static head provided by the cistern should be a minimum of 300 mm (12 in) measured to the highest point of the heating system. The supply pipe from the cistern should include the double check valve assembly and stop valve.

5.2.2 Using one of the methods detailed in 5.2.1, slowly fill the system until the pressure gauge indicates 1.5 bar (22psi), then check the pressure relief valve by lifting the lever and carefully release water until the initial system design pressure is achieved.

5.3 **GAS PRESSURE SETTING**

5.3.1 Referring to Fig. 4, remove the Outlet Pressure Test Point cover from the Multifunctional control and connect a Gas Pressure Test Gauge.

5.3.2 Turn the gas supply ON at the gas service cock.

5.3.3 Referring to lighting instruction label, ignite the pilot burner and referring to Fig. 3, ensure that the pilot flame envelopes the thermocouple tip, adjusting the Pilot Adjusting screw if necessary (at least open by four full turns).
Note: The pilot is factory set and should require no adjustment, however, if the pilot flame cannot be set using the Pilot Adjustment screw, the pilot burner assembly must be replaced.

5.3.4 Turn ON the electrical supply to the appliance.

5.3.5 Depress the Multifunctional control knob and turn it fully clockwise to the ‘flame’ symbol and ensure that the main burner ignites. The appliance will now operate under thermostatic control.
Note: Water temperature is adjustable between a minimum of 55°C (122°F), and 77°C (171°F) maximum by means of the thermostat control.

5.3.6 Test the appliance for gas soundness, sealing any leaks found.

5.3.7 Allow the appliance to operate for 15 minutes to ensure stability, and referring to Fig. 4 and Table 1, set the Multifunctional control burner Pressure Adjuster to provide the required output.

Note: The burner pressure is factory set to provide HIGH rate output.

5.3.8 Apply the 'pressure set' arrow to the appropriate column on the Rating Label/Data Badge.

5.3.9 With all other appliances turned off, check the gas rate with a meter and stop watch, and further adjust as necessary.

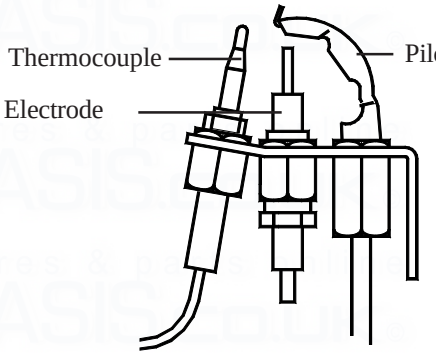

Fig. 3
Pilot Burner

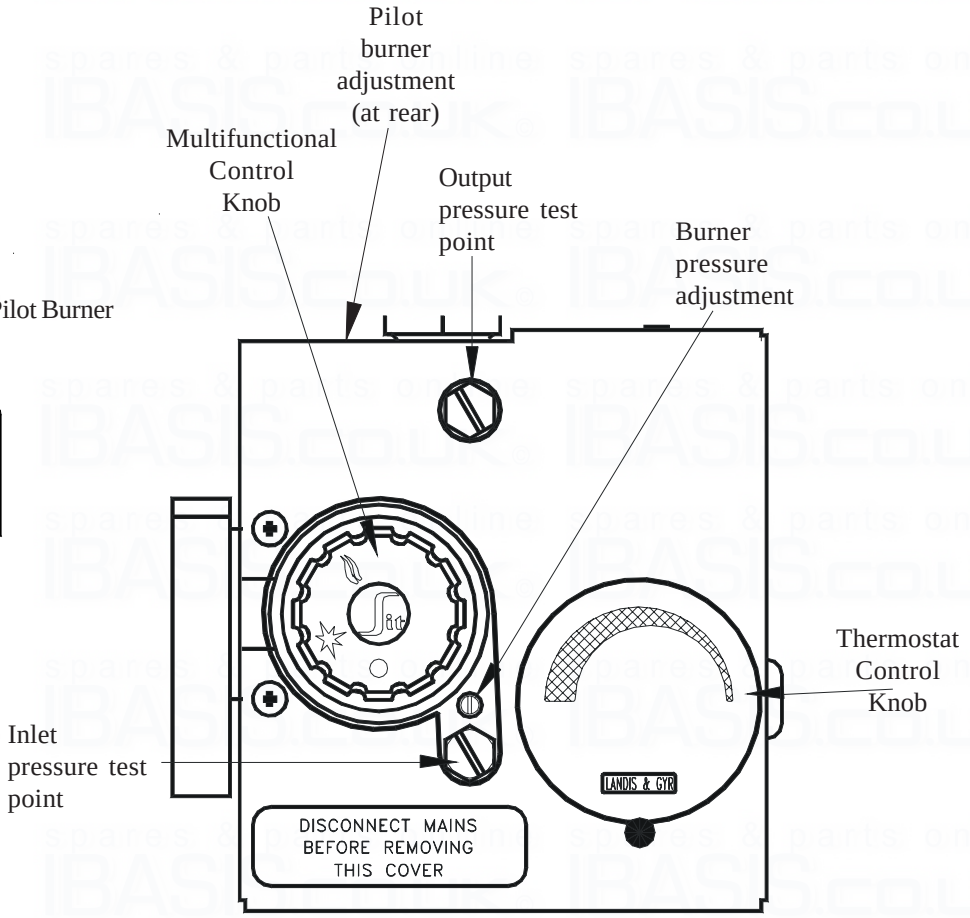

Fig. 4
Multifunctional control

5.4 SYSTEM OPERATION:

5.4.1 **Pump overrun testing:**

a. With the appliance ignited and the water cylinder thermostat calling for heat, set the circulator time control/ manual switch to an OFF position, and ensure that the circulator main burner extinguishes immediately whilst the pilot remains alight and the pump continues to run for a short time before stopping.

b. Set the circulator time control/manual switch to an ON position.

5.4.2 **Spillage test:** With the appliance ignited and the water cylinder thermostat calling for heat, carry out a spillage test as detailed in the Installation, Commissioning and Servicing instructions for the relevant air heater

5.4.3 Allow the system to reach working temperature and switch the appliance OFF, rapidly drain and refill the system, clearing any air locks and test for water soundness.

5.4.4 Turn OFF the Gas supply at the air heater service cock.

5.4.5 At the Multifunctional control, remove the Gas Pressure Test Gauge and refit the Outlet Pressure cover.

5.4.6 Turn Gas supply ON at the air heater service cock.

5.4.7 Relight the appliance and set the appliance to the User's requirements.

6. INSTRUCTIONS FOR USER

6.1 If the building is unoccupied, ensure that the User Instructions (including those for the air heater) are left with the appliance for the user. Leave THESE Installation Instructions with the appliance for use on future service calls.

6.2 If the building is occupied, hand the User Instructions to the occupier and ensure that the user is instructed on the following:

6.2.1 How to use the circulator independently from the air heater.

6.2.2 How to light the appliance.

6.2.3 How to adjust the water temperature.

6.2.4 That the appliance must be serviced at least once a year by a competent person, to ensure efficient and safe operation.

6.2.5 The instructions for safe use have been read and understood.

6.2.6 That if persistent failure of the pilot burner occurs, expert help must be obtained.

6.2.7 What actions to take in an emergency shutdown.

6.2.8 What actions to take if there is an escape of gas, i.e. turn off the gas supply at the gas meter, extinguish any naked flame, ventilate the area, **DO NOT** operate any **electrical switches**, call the emergency service of the local gas authority.

6.2.9 That if the system incorporates a water pressure gauge falls below the 'normal' level when the system is cold or, if hot water is being discharged, there is a fault in the system and expert advice must be sought.

7. MAINTENANCE

IMPORTANT: Ensure gas and electricity supplies are isolated before commencing any maintenance or replacement of components. After completion of any maintenance, always check that any air locks are cleared, test for gas soundness and carry out a complete functional test of the appliance in accordance with Commissioning Instructions at Sect 5.1 to 5.4 inclusive.

7.1 **SEALED SYSTEM MAINTENANCE:** Servicing of a sealed system should be carried out during routine maintenance of the circulator as follows:

7.1.1 Before closing down the system, check that there is no discharge of hot water at any point.

7.1.2 Switch off the circulator and release the pressure by lifting the level on the pressure relief valve.

7.1.3 Check and clean the line strainer as necessary.

7.1.4 Refill and re-pressurise the system as detailed in Section 5.2.

7.2 **ROUTINE MAINTENANCE**

7.2.1 Operate the appliance and check for correct function of the burner and controls.

7.2.2 Remove and inspect the Burner and Control Assembly, cleaning the main burner, pilot burner, lint arrestor and injectors as required.

7.2.3 Inspect the Thermocouple and ignition lead for signs of damage, cleaning or replacing as required.

7.2.4 Inspect the Heat Exchanger flueways, clean by brushing from above and below and taking care to avoid damaging the surrounding insulation. Remove debris from the Heat Exchanger and Burner aperture using a vacuum cleaner or air duster. Clean any debris from the heat shield at the base of the appliance.

7.2.5 Ignite the appliance and test for gas soundness.

7.2.6 Recommission the appliance in accordance with section 5 of these instructions.

7.2.7 Ensure that the appliance and controls are operating correctly.

7.2.8 Carry out spillage test to ensure flue products are clearing satisfactorily.

7.3 **BURNER AND CONTROLS ASSEMBLY REMOVAL:**

7.3.1 Ensure that the gas supply is turned OFF at the supply cock, and the electrical supply is isolated.

7.3.2 Remove the lower front door of the air heater.

7.3.3 Disconnect the ignition lead from the Piezo unit.

7.3.4 Withdraw the cotter pin from the thermostat pocket and remove thermostat phial, taking care to avoid damage to the thermostat.

7.3.5 Partially unscrew the thermocouple connection at the Multifunctional control and remove the thermocouple interrupter from the adaptor.

7.3.6 Disconnect the gas feed pipe from the appliance.

7.3.7 Release the four screws from the front mounting plate and partially withdraw burner and control assembly.

7.3.8 Disconnect the power plug and earth lead from the Multifunctional control.

7.3.9 Remove the two screws to the left hand side of the Multifunctional control knob, and remove the thermostat and wiring terminal assembly.

7.3.10 Refitment or replacement is in reverse order, ensuring that when refitting thermostat phial care is taken to avoid damaging the phial.

7.4 PILOT ASSEMBLY REMOVAL:

7.4.1 Remove the Burner and controls assembly as detailed in para 7.3

7.4.2 Disconnect the ignition lead from the electrode.

7.4.3 Release the thermocouple connection from the Multifunctional control.

7.4.4 Disconnect the pilot gas feed pipe from the pilot injector.

7.4.5 Remove the two pilot mounting bracket securing screws and nuts, and withdraw the pilot assembly from the main burner.

7.4.6 Refitment or replacement is in reverse order, ensuring that the thermocouple connection at the Multifunctional control is not over tightened (finger tight + ¼ turn only), that the thermocouple interrupter 'tagged' insert is fitted at the Multifunctional control, and the relationship between the pilot assembly and the Main burner is as shown in Fig. 5.

7.5 MAIN BURNER AND MAIN INJECTOR REMOVAL:

7.5.1 Remove the Burner and Controls assembly as detailed in para 7.3

7.5.2 Remove the lint arrester securing screw and withdraw the lint arrester.

7.5.3 Unscrew the main injector from the injector housing.

7.5.4 Refitment or replacement is in reverse order, and ensure that the relationship between the pilot assembly and the Main burner is as shown in Fig. 5.

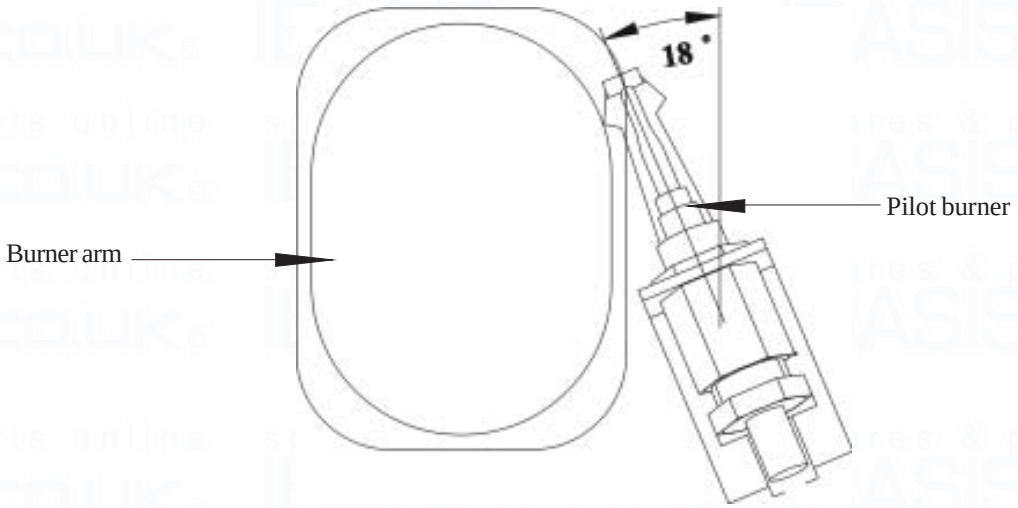

Fig. 5
Pilot assembly to Main burner relationship

7.6 **OVERHEAT CUTOFF DEVICE REMOVAL:**

7.6.1 Remove the Burner and Controls assembly as detailed in para 7.3

7.6.2 Partially unscrew the thermocouple connection at the Multifunctional control and remove the thermocouple interrupter from the adaptor.

7.6.3 Unwind the interrupter wiring from the gas feed pipe.

7.6.4 Remove the two screws securing the overheat cut-off switch to the plate on the Flow pipe and withdraw the overheat cut-off assembly.

7.6.5 Refitment or replacement is in reverse order.

7.7 **MULTIFUNCTIONAL CONTROL REMOVAL:**

7.7.1 Remove the Burner and Controls assembly as detailed in para 7.3.

7.7.2 Remove the Pilot assembly as detailed in para 7.4.

7.7.3 Remove the lint arrester securing screw and withdraw the lint arrester.

7.7.4 Slacken the lock nut in front of the lint arrester housing.

7.7.5 Unscrew the Multifunctional control complete with the main injector and housing from the burner assembly.

7.7.6 Unscrew the main injector housing from the Multifunctional control.

7.7.7 Refitment or replacement is in reverse order, ensuring that the 'O' ring seal is replaced if damaged, and the lock nut is approximately 2 threads from the carrier shoulder. **Do not over tighten the lock nut**.

7.8 **THERMOSTAT REPLACEMENT:**

7.8.1 Remove the Burner and Controls assembly as detailed in para 7.3.

7.8.2 Remove the thermostat control knob by pulling it from its spindle.

7.8.3 Remove the two thermostat securing screws from the wiring terminal, having noted the position of the hexagonal headed pegged screw.

7.8.4 Carefully remove the thermostat, thermostat phial and capillary from the terminal housing.

7.8.5 Note the position of the thermostat connections, and disconnect the connections.

7.8.6 Refitting or replacement is in reverse order.

Note: Take care to avoid causing damage to the thermostat phial and capillary during replacement or refitment. Rotate the thermostat spindle fully anticlockwise before refitting the thermostat control knob in the **OFF** position. **Do not force fit the control knob**.

7.9 **CIRCULATOR BODY REMOVAL:**

IMPORTANT: The main body fittings must be well supported when remaking water connections.

Note: For J25-32 applications, the circulator body must be removed with care to avoid causing damage to the foil reflector situated on the inside face of the right hand panel of the air heater.

7.9.1 Remove the Burner and Controls assembly as detailed in para 7.3.

7.9.2 Drain down the water system and disconnect the flow and return connections from the circulator.

7.9.3 **J25-32 air heaters only:** Loosen the fastening located on the air heater bulkhead, directly above the leading edge of the curved sweep baffle, and prop the baffle clear of the circulator flue hood.

7.9.4 Remove the two screws securing the overheat cut-off switch to the plate on the Flow pipe and withdraw the cut-off switch.

7.9.5 Release the 2 x screws securing the circulator to the air heater bulkhead and withdraw the circulator body from the air heater cabinet.

7.9.6 Remove the top centre fixing screw and slide the flue to the rear of the circulator body.

Note: On some appliances it may be necessary to remove the piezo unit and its mounting bracket, and disconnect the main gas feed pipe before removing the flue hood. **Ensure that any replacement body is clearly marked SUPERJAN**.

7.9.7 Refitment or replacement is in reverse order.

IMPORTANT:

J25-32 AIR HEATERS:

a. Check the condition of the foil reflector on the inside right hand side panel of the air heater, and replace if damaged.

b. Ensure that the sweep baffle is correctly located beneath the secondary outlet at the rear of the air heater, and that the flue hood locates positively into the mouth of the flue pipe (refer to Fig. 7).

JT19-25 AIR HEATERS:

a. Ensure that the flue hood spigot and body extension pass through their respective holes in the rear panel of the air heater.

7.10 **HEAT EXCHANGER ASSEMBLY INSPECTION & ACCESS:**

7.10.1 Remove the Burner and Controls assembly as detailed in para 7.3.

7.10.2 **J25-32 Air Heaters only:** Loosen the fastening located on the air heater bulkhead, directly above the leading edge of the curved sweep baffle, and prop the baffle clear of the circulator flue hood.

7.10.3 Remove the 2 pozidrive screws from the sloping face of the flue hood and remove the inspection plate.

7.10.4 Re-assembly is in reverse order, replacing the inspection plate gasket if necessary.

IMPORTANT:

J25-32 AIR HEATERS:

a. Ensure that the sweep baffle is correctly located beneath the secondary outlet at the rear of the air heater, and that the flue hood locates positively into the mouth of the flue pipe.

7.11 **PUMP OVERRUN SWITCH REPLACEMENT (if fitted):**

7.11.1 Remove the Burner and Controls assembly as detailed in para 7.3.

7.11.2 Referring to the Installation, Commissioning and Servicing instructions provided with the air heater, identify and disconnect the three pump overrun switch wires, having noted their position.

7.11.3 Slacken the three securing screws and lift the pump overrun switch from the appliance.

7.11.4 Refitment or replacement is in reverse order.

8. DEFECT DIAGNOSIS

IMPORTANT: If an electrical defect occurs after installation of the appliance; preliminary earth continuity, polarity, and resistance to earth checks should be carried out with a multimeter. On completion of any maintenance/fault-finding task that has required the breaking and remaking of electrical connections, then checks of continuity, polarity, and resistance to earth must be repeated.

NOTE: When purging or checking gas supplies ensure that, there is adequate ventilation to the room or cupboard, and all naked lights are extinguished.

	SYMPTOM		POSSIBLE CAUSE	RECTIFICATION
a.	Pilot fails to light.	i	No gas supply to water heater.	Check for gas at inlet pressure test point on Multifunctional control.
		ii	Gas supply not purged.	Purge gas supply pipe in accordance with BS 6891.
		iii	Pilot injector orifice restricted.	Clean pilot orifice or replace pilot assembly.
		iv	Pilot aeration port obstructed.	Clean aeration port or replace pilot assembly.
		v	Piezo faulty.	Check/replace piezo unit, lead or pilot burner assembly.
b.	Pilot fails to remain lit when START button is released.	i	Connections between thermocouple and multifunctional control not secure.	Check connections are secure.
		ii	Thermocouple interrupter not providing correct output.	Check thermocouple interrupter output (refer to para 8.1) and replace if necessary.
		iii	Thermocouple defective.	Replace thermocouple.
		iv	Overheat cut-off device defective.	Replace overheat cut-off device.
		v	Multifunctional control defective.	Replace multifunctional control.
c.	Pilot burner goes out repeatedly after normal operation.	i	Pilot injector orifice restricted.	Clean pilot orifice or replace pilot assembly.
		ii	Pilot aeration port obstructed.	Clean aeration port or replace pilot assembly.
		iii	Thermocouple defective.	Replace pilot assembly.
		iv	Draughts affecting pilot flame.	Eliminate draughts.
		v	Combustion air contaminated.	Conduct spillage test and rectify.
d.	Main burner fails to light.	i	Thermostat overheat.	Draw off hot water from system to allow thermostat to cool, and ensure burner lights.
		ii	Thermostat defective.	Replace thermostat.
		iii	Multifunctional control defective.	Replace Multifunctional control.
e.	Insufficient hot water.	i.	Burner operation cycle too short due to incorrect plumbing.	Check plumbing, in particular lateral runs.
		ii	Pump not operating.	Check pump and replace if necessary.

f.	Water temperature outside usable range.	i. Thermostat out of calibration.	Set thermostat for required water temperature or replace Multifunctional control.
		ii. Gas rate incorrect.	Check burner pressure, main injector for blockage, replace main injector if faulty.
		iii Thermostat phial or capillary damaged.	Replace Multifunctional control.
g.	External pump will not run.	i Pump defective.	Replace pump.
		ii Pump overrun switch defective	Replace pump overrun switch.

IMPORTANT: If a faulty heater control may have resulted in excessively high water temperatures, (above 85ºC, 185ºF), the hot water cylinder should be checked to establish whether it is a SELF-PRIMING type. If so, the circuit should be drained and refilled to ensure that the air seal between the primary and secondary circuits in the cylinder is properly established.

8.1 **CHECKING THERMOCOUPLE INTERRUPTER OUTPUT:**

8.1.1 With the circulator operating, connect a multimeter set to 200mV dc range as follows:

a. **POSITIVE** to the bare copper conductor on the thermocouple.
b. **NEGATIVE** to the lower terminal of the thermocouple interrupter block, and not the voltage as 'V_1'
c. Transfer the **NEGATIVE** multimeter connection to the upper terminal of the thermocouple interrupter block, and note the voltage as 'V_2'

8.1.2 Ensure 'V_1' is approximately 12mV, and 'V_2' is not less than 6mV.
If 'V_1' is less than 12mV, then there is a problem within the thermocouple system.
If 'V_2' is less than 6mV, then the interrupter switch is defective.

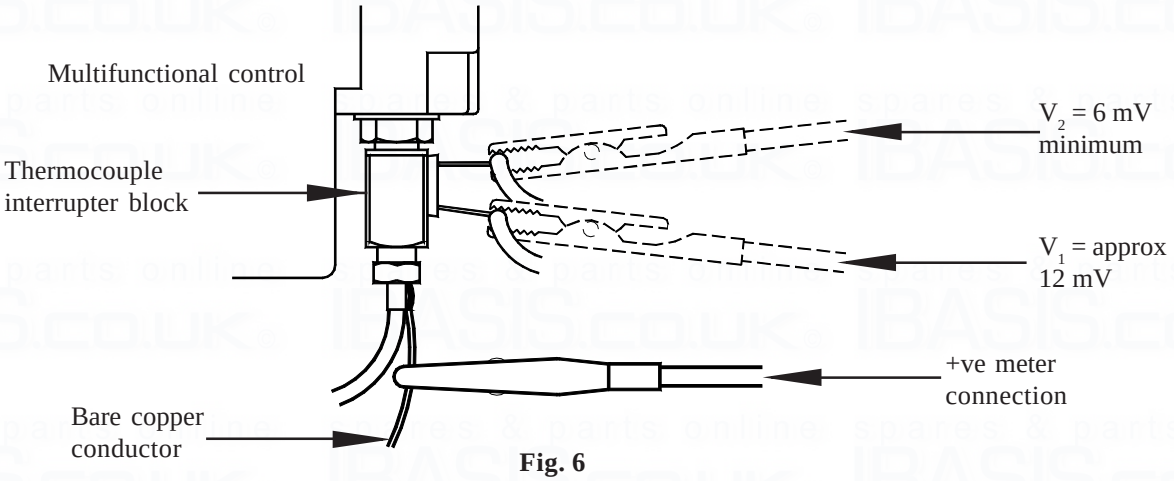

Fig. 6
Thermocouple interrupter output check

10. **SHORT LIST OF SPARES**

G.C. No	J&S Part No	Description	Qty
245 287	S00396	Water body replacement assembly	1
254 299	S600-0700000	Burner and controls assembly	1
397 454	1000-0702010	Main injector	1
245 306	1000-0701960	Injector housing	1
245 300	1000-0701995	Multifunctional control exchange assembly	1
	BOS 02397	Pilot burner assembly	1
	S 00254	Pilot Injector	1
	BOS 02394	Electrode lead	1
381 713	1000-0702030	Thermocouple	1
	BOS 01970	Electrode	1
398 003	1000-0702040	Thermostat complete with phial	1
245 302	S00404	Thermostat knob	1
245 307	S600-0129000	Lint arrester gauze	1
245 295	1000-3001030	cotter pin	1
245 296	1000-0506730	Overheat Cut-off device complete with leads	1
398 006	1000-0703010	Thermocouple interrupter kit	1
245 303	S600-0500005	Wiring harness including terminal	1
245 308	S600-0710005	Burner arm replacement assembly	1

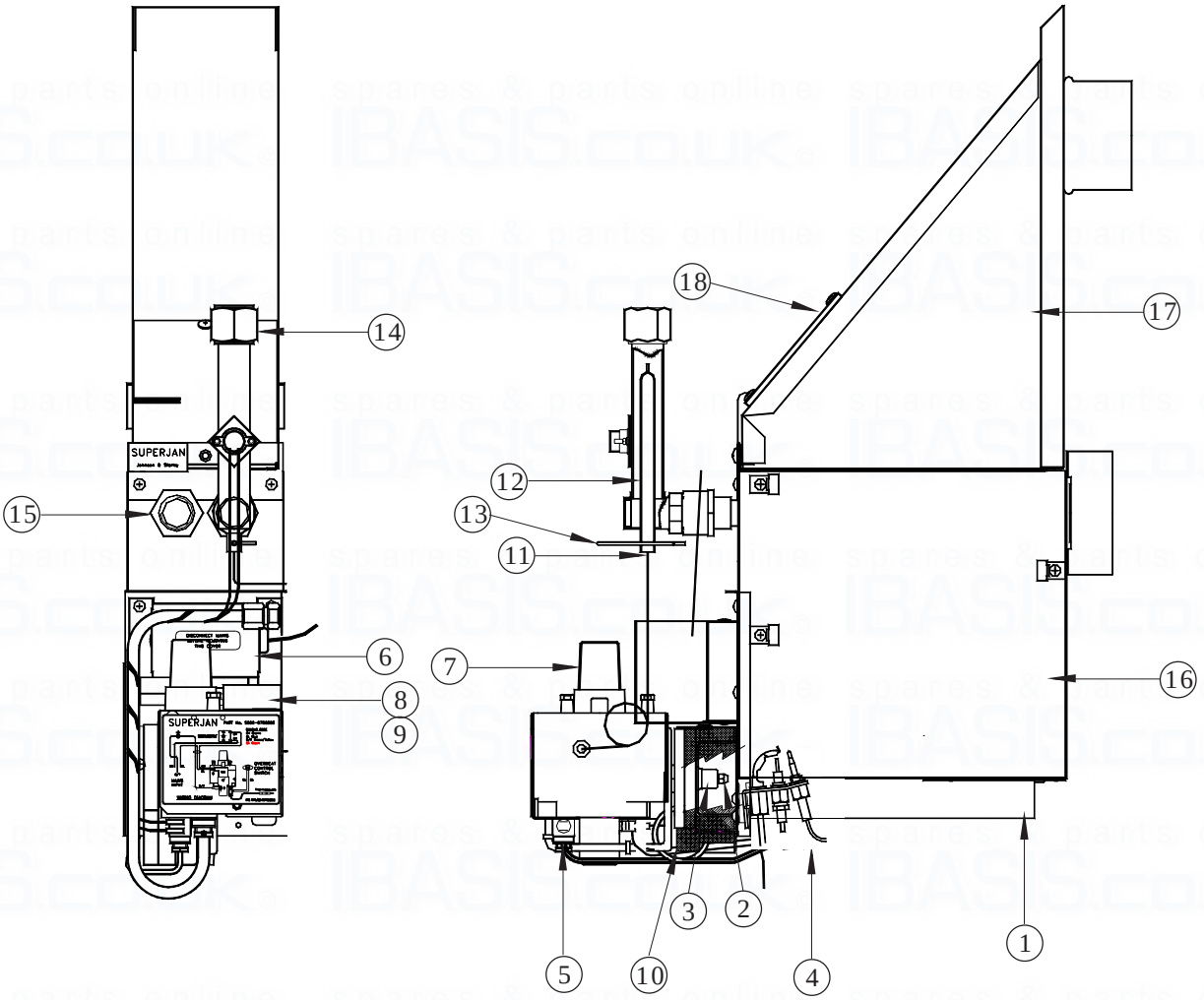

Fig. 7
SUPERJAN general component layout

Key	Description	Key	Description
1	Main burner	10	Lint arrestor gauze
2	Main injector	11	Thermostat phial
3	Main injector housing	12	Thermostat phial pocket
4	Pilot burner assembly	13	Cotter pin
5	Thermocouple interrupter block	14	Water flow connection ($Rp^3/_4$)
6	Pump overrun switch	15	Water return connections ($Rp^3/_4$)
7	Multifunctional control	16	Circulator main body
8	Thermostat	17	Flue hood
9	Thermostat control knob	18	Flue inspection plate

Johnson and Starley prides itself on its ability to supply spare parts quickly and efficiently. If your service engineer indicates a problem in obtaining a spare part, advise him to contact Johnson and Starley Spares Department at the address below.

Telephone: 01604 762881

Fax : 01604 767408

JOHNSON AND STARLEY Ltd.,
Rhosili Road,
Brackmills,
Northampton NN4 7LZ